FULLY HYDRAULIC ON ALL FUNCTION
POWER BOOMING– 70 DEGREES
POWER ROTATION–180 OR 360
LINEAR HOISTING– SMOOTH & QUIET

Nick Jackson Co. Ph. 425-481-1381 Fax 882-2054
Quality Yacht Davits World Wide Nickjacksonco.com - e-NJCDavits@aol.com
17725 NE 65th St. Suite A- 175 Redmond WA. 98052

1500#–LINEAR

Jan 02

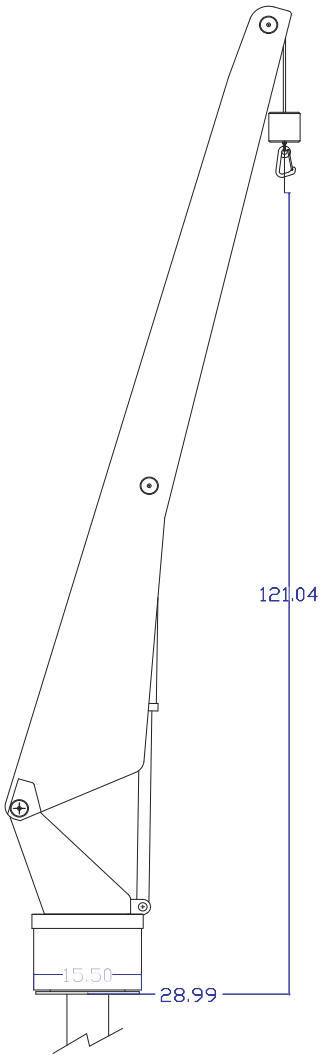

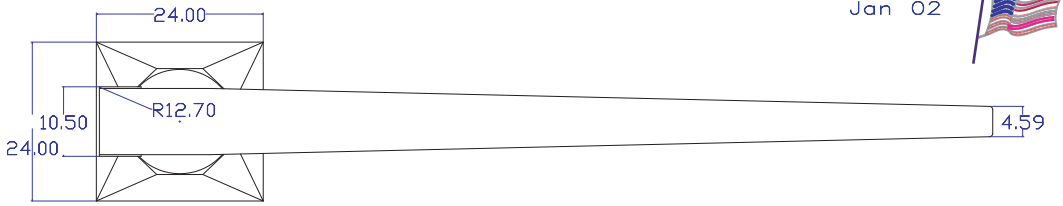

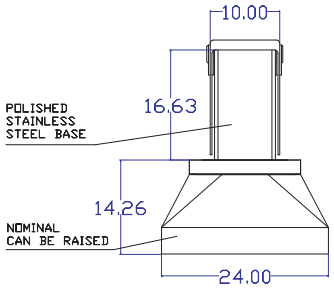

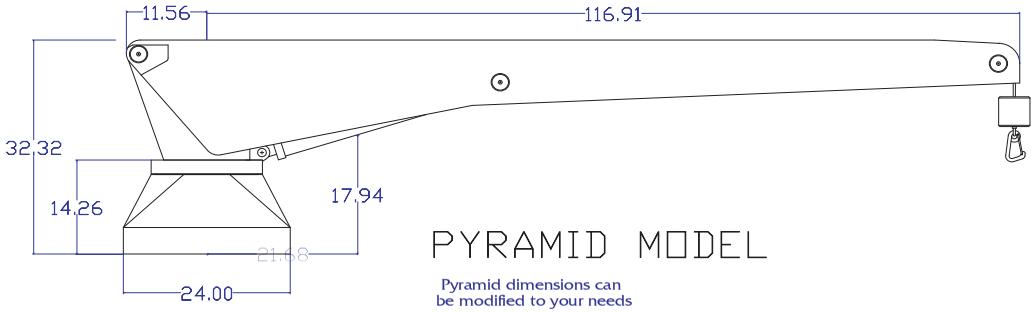

PYRAMID MODEL

Pyramid dimensions can be modified to your needs

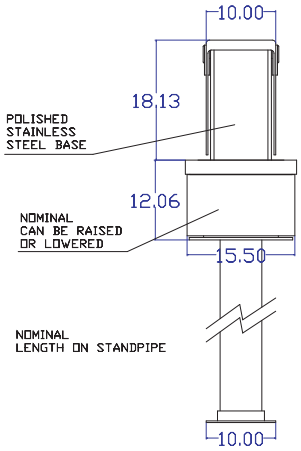

20"L x 10 W" x 10" tall

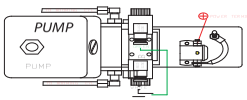

Uses .8 gallon a minute @ 2800 psi
Comes w/ stainless hydraulic lines
12v needs 200 amps of service
24 v needs 150 amps of service

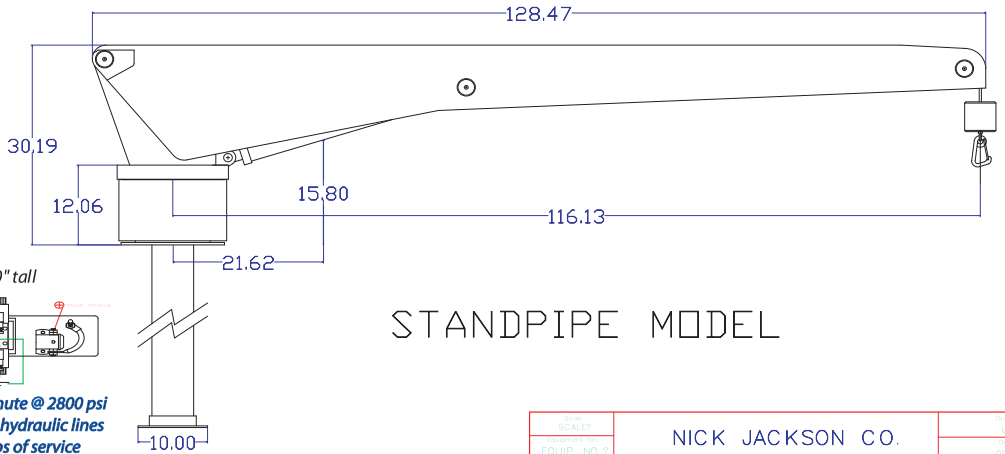

STANDPIPE MODEL

Scale SCALE?	NICK JACKSON CO.	Drawn MR
Equipment No. EQUIP_NO.?		Date 05-01
WO. No. WO_NO.?	Drawing Title 1500#–LINEAR	Drawing No. DWG

THE SMOOTHEST AND THE QUIETEST UNIT YOU CAN BUY. FULLY HYDRAULIC 3 FUNCTIONS. SILENT OPERATION. PENDANT OPERATED.
AS A STANDARD UNIT, THIS COMES IN LENGTH OF 9 1/2' OF REACH IN THE DOWN POSITION. STANDPIPE OR PYRAMID MOUNTED
AS YOU REQUIRE. DIMENSIONAL HEIGHT OF THE UNIT CAN BE LOWERED OR RAISED TO FIT YOUR NEED. CUSTOM CAPABILITY
USES LESS THAN ONE GALLON OF FLUID TO OPERATE. 12V, 24V OR 115VAC OPERATED BY SEPERATE
AUTOCAD DRAWINGS AVAILABLE FOR YOU TO WORK WITH. CALL OR E-mail US FOR YOUR PROJECT. **Ph. 425-481-1381 * NJCDAVITS@aol.com**

Quality Yacht Davit Systems

Quality Yacht Davit Systems